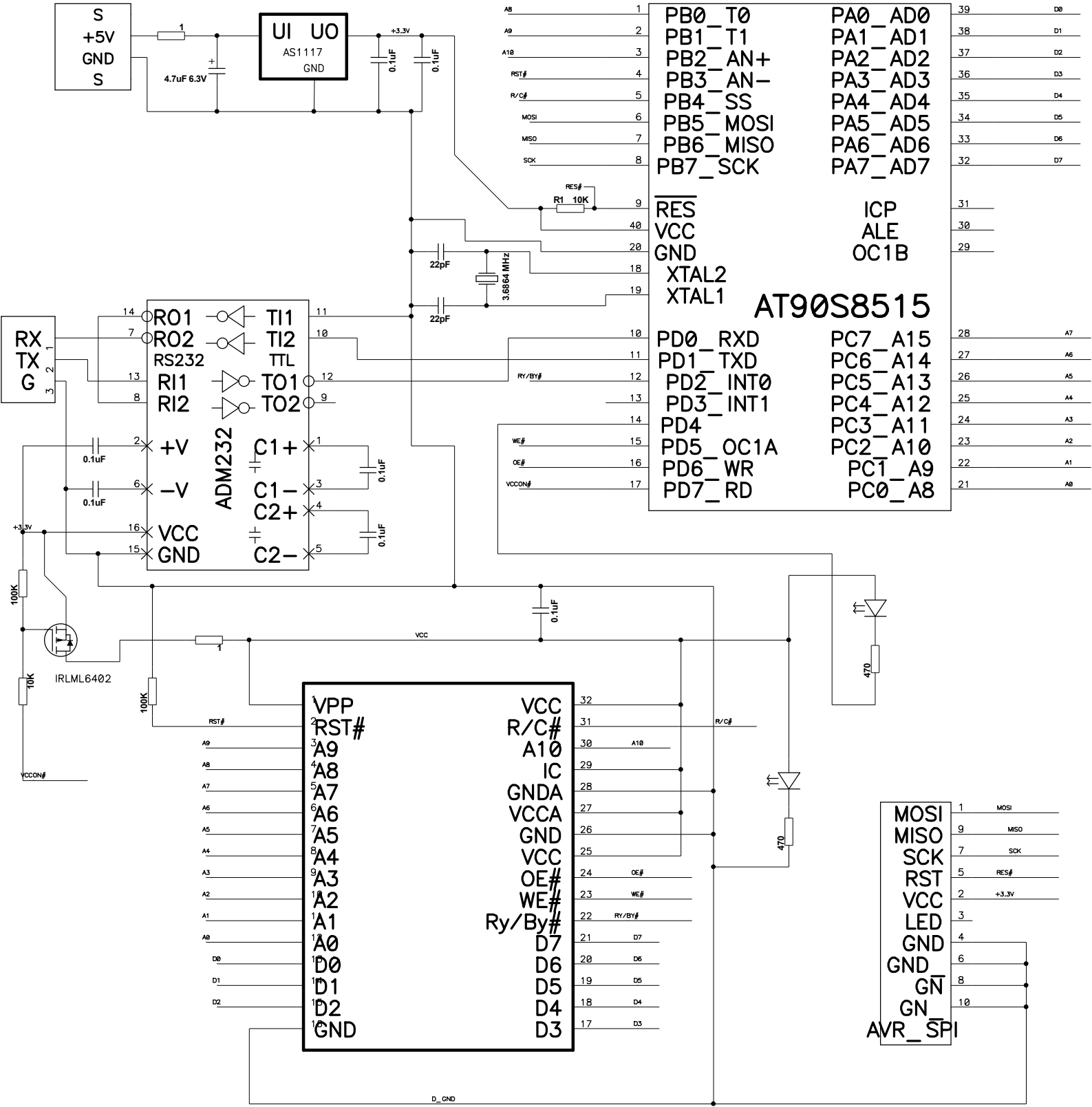
S
+5V
GND
S
4.7uF 6.3V
UI UO
AS1117
GND
+3.3V
0.1uF
0.1uF
PB0_T0
PB1_T1
PB2_AN+
PB3_AN−
PB4_SS
PB5_MOSI
PB6_MISO
PB7_SCK
RES
VCC
GND
XTAL2
XTAL1
PA0_AD0
PA1_AD1
PA2_AD2
PA3_AD3
PA4_AD4
PA5_AD5
PA6_AD6
PA7_AD7
ICP
ALE
OC1B
AT90S8515
PD0_RXD
PD1_TXD
PD2_INT0
PD3_INT1
PD4
PD5_OC1A
PD6_WR
PD7_RD
PC7_A15
PC6_A14
PC5_A13
PC4_A12
PC3_A11
PC2_A10
PC1_A9
PC0_A8
R1 10K
RES#
22pF
22pF
3.6864 MHz
RX
TX
G
RS232
TTL
RO1
RO2
RI1
RI2
TI1
TI2
TO1
TO2
ADM232
+V
−V
VCC
GND
C1+
C1−
C2+
C2−
0.1uF
0.1uF
0.1uF
0.1uF
0.1uF
100K
10K
IRLML6402
VCC
470
470
VPP
RST#
A9
A8
A7
A6
A5
A4
A3
A2
A1
A0
D0
D1
D2
GND
VCC
R/C#
A10
IC
GNDA
VCCA
GND
VCC
OE#
WE#
Ry/By#
D7
D6
D5
D4
D3
MOSI
MISO
SCK
RST
VCC
LED
GND
GND
GN
GN
AVR_SPI
D_GND